SFERA R

Avx2800=3R -40 | 42 -= Ok

Pezefs he ettskkms s wswtiws0tvihmwtsws tivvyfmrixxivme q srsjsvs
Pe}1sr#sv#{ epq q syrxih#{ ewlfewmr0gsrâkyvih#jsv#wmrkpillspi#et#wix
Pezefs > tswivsy wywtirhy0gsr+y tsyvvsfmrixxivmi q srsxvsy
Ayjwex-shivLflrki{ ewglfigoir0eywkipkxj¨v1-Psgl-Avq exyv

XO PS

PINE>
Avx2420 -Avx2410 -Avx2400

FRID SISXEQ >
Avx2230 -Avx2130 -Avx2120 -Avx2110

ANXIDA>
Avx2600 -Avx2610

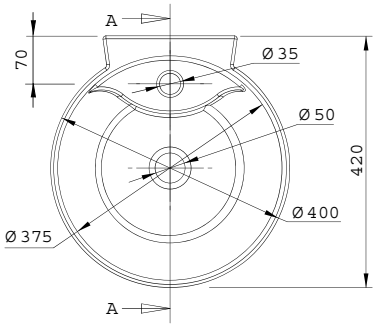

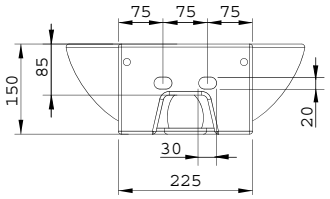
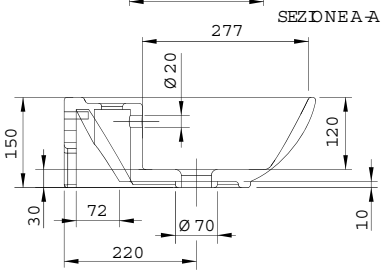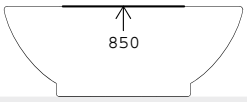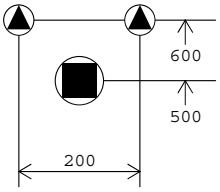
SEZIONE A-A