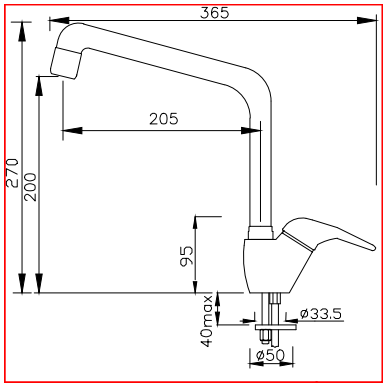
365
205
270
200
95
40max
ø33.5
ø50