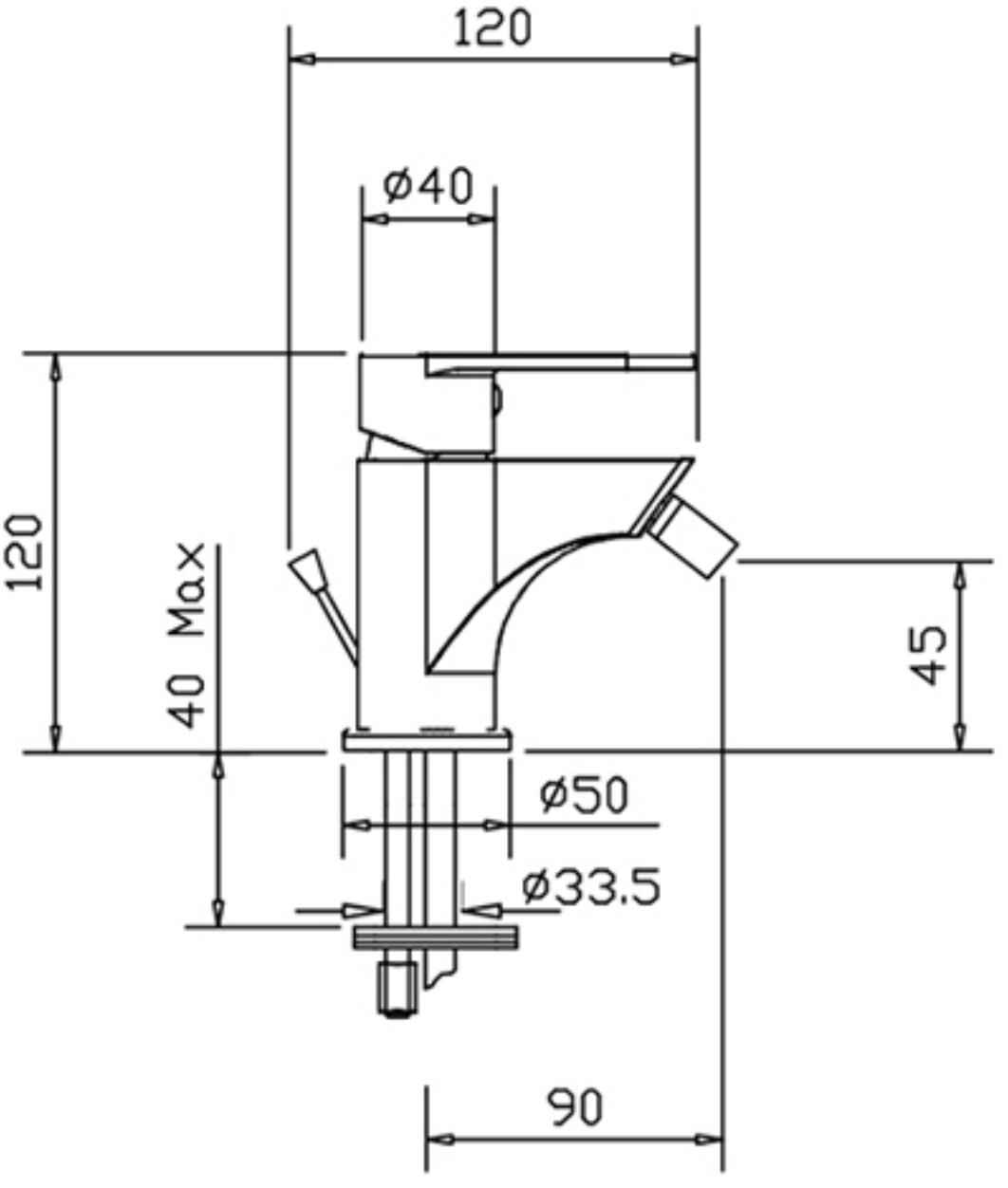
120
ø40
120
40 Max
45
ø50
ø33.5
90