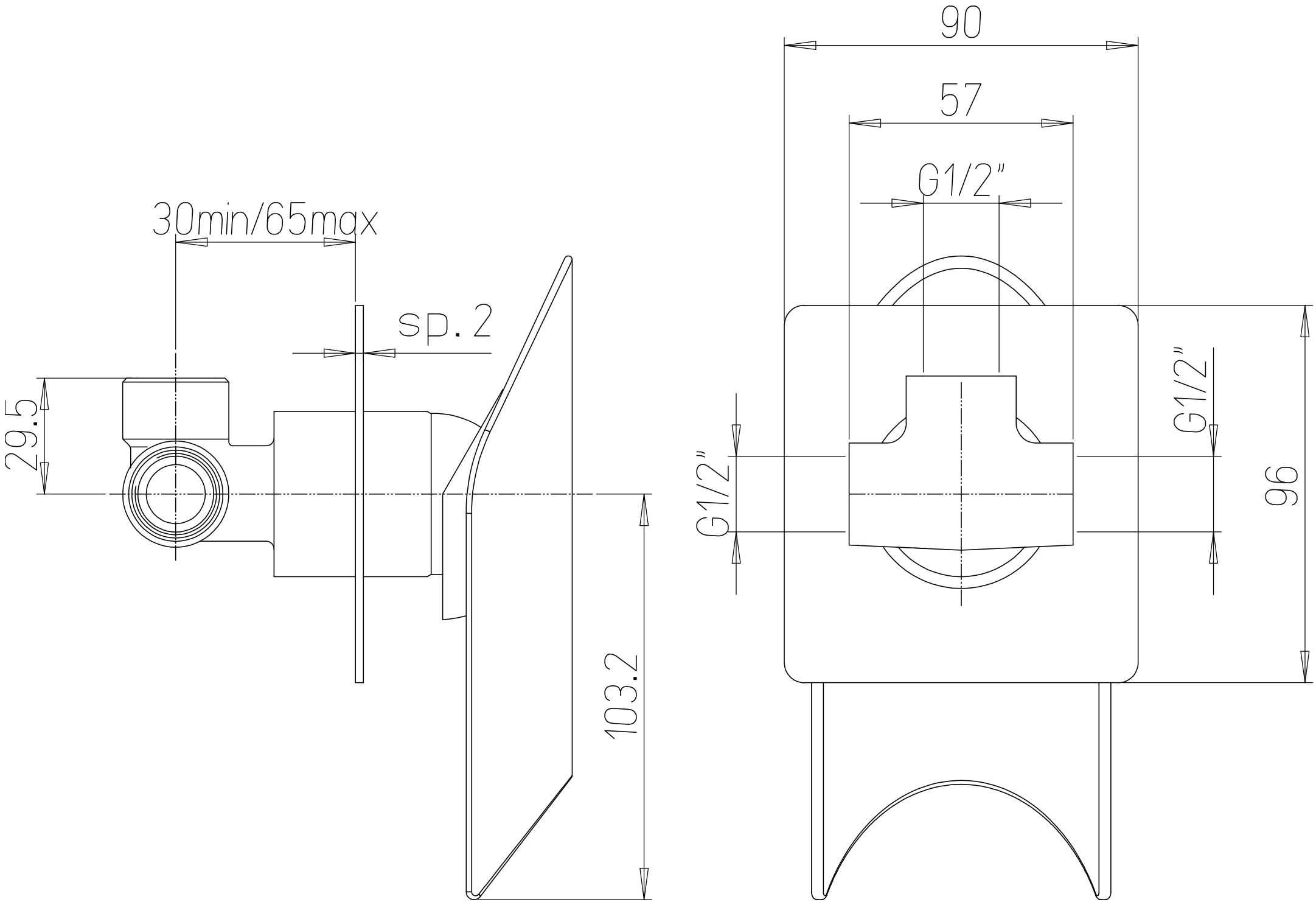
30min/65max
sp. 2
29.5
103.2
90
57
G1/2"
G1/2"
G1/2"
96