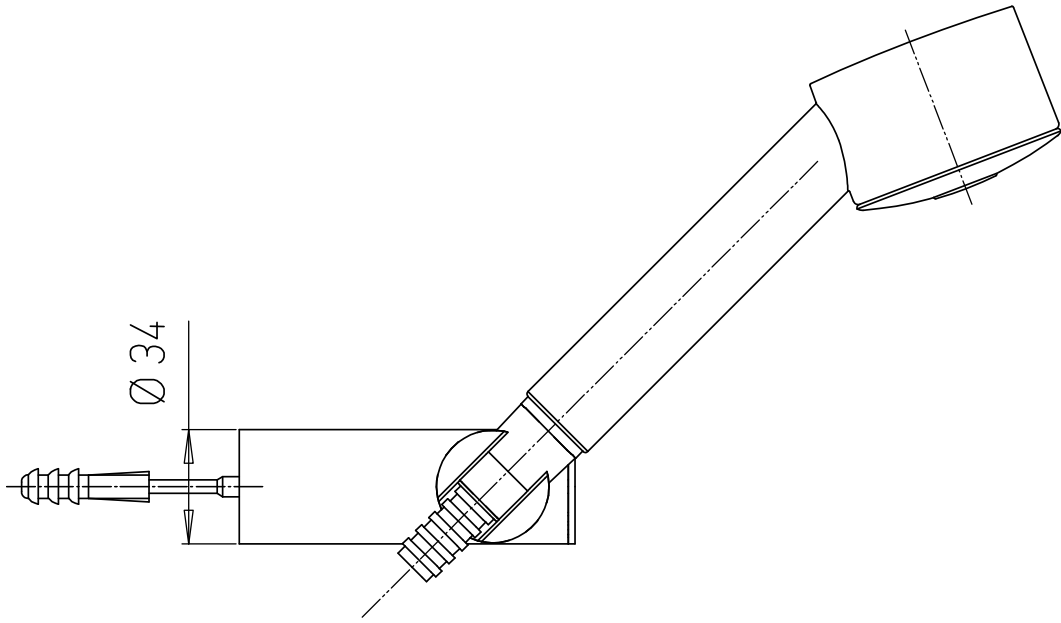
Ø 34

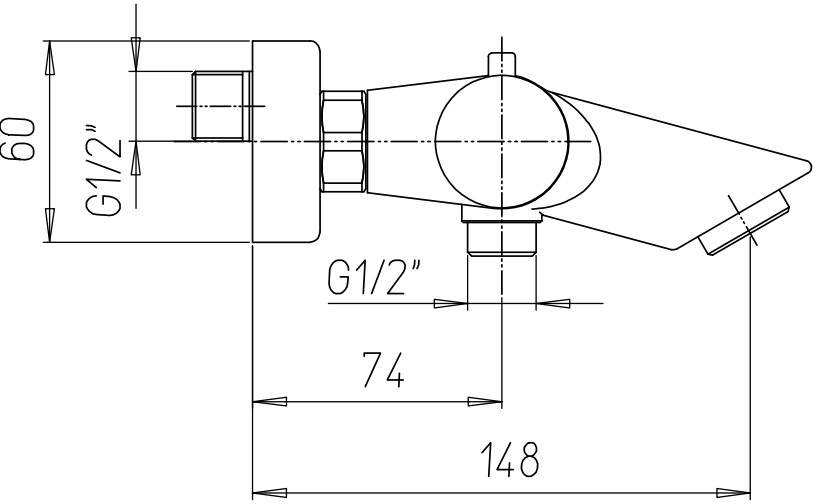
60
G1/2"
G1/2"
74
148

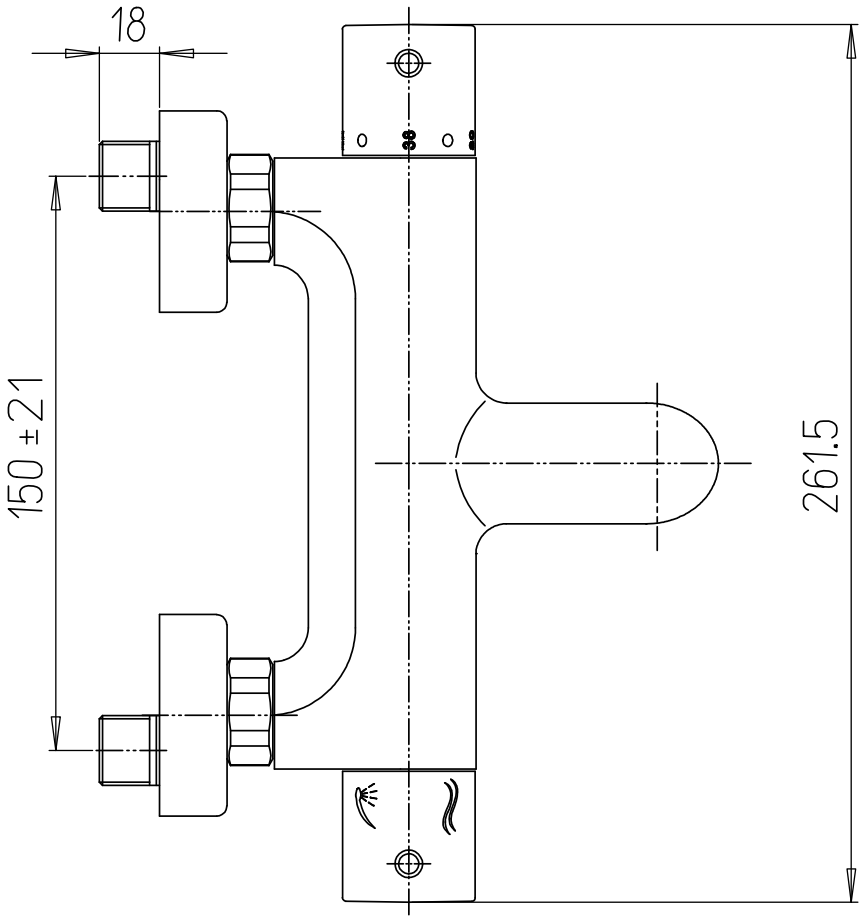
18
150 ±21
261.5