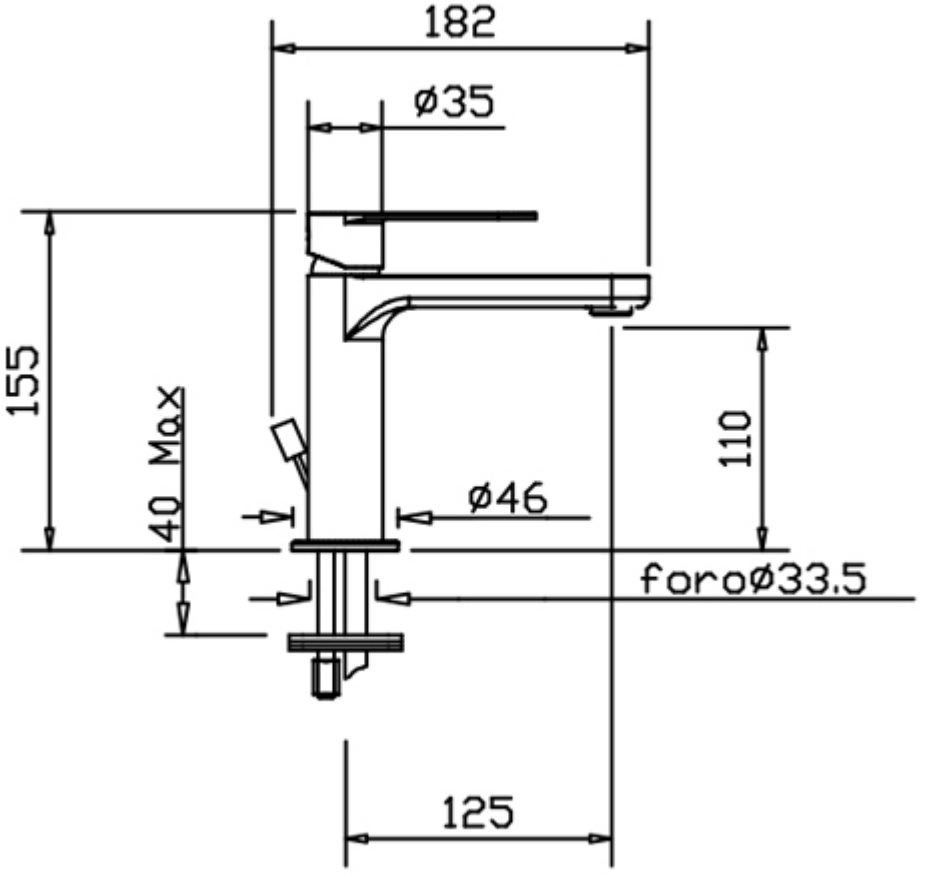
182
ø35
155
40 Max
110
ø46
foro ø33.5
125