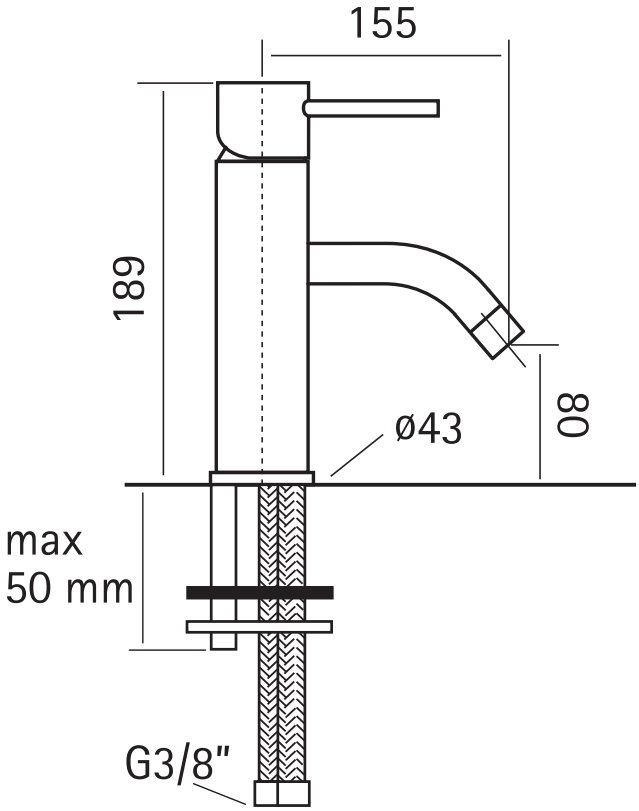
155
189
80
ø43
max
50 mm
G3/8"