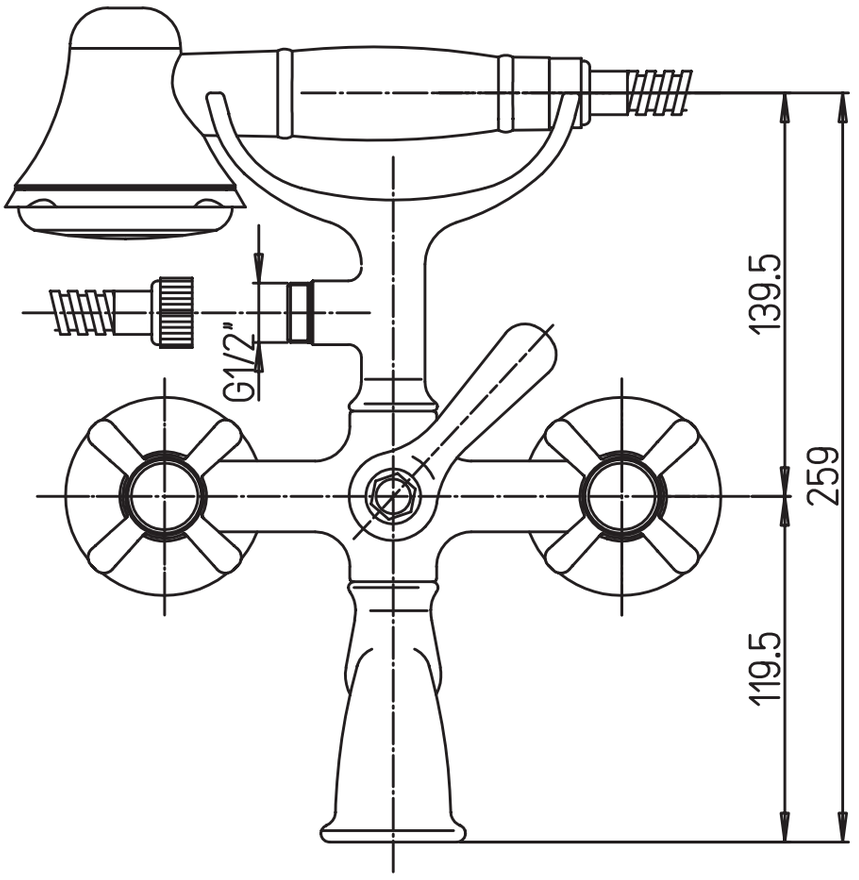
G1/2"
139.5
259
119.5

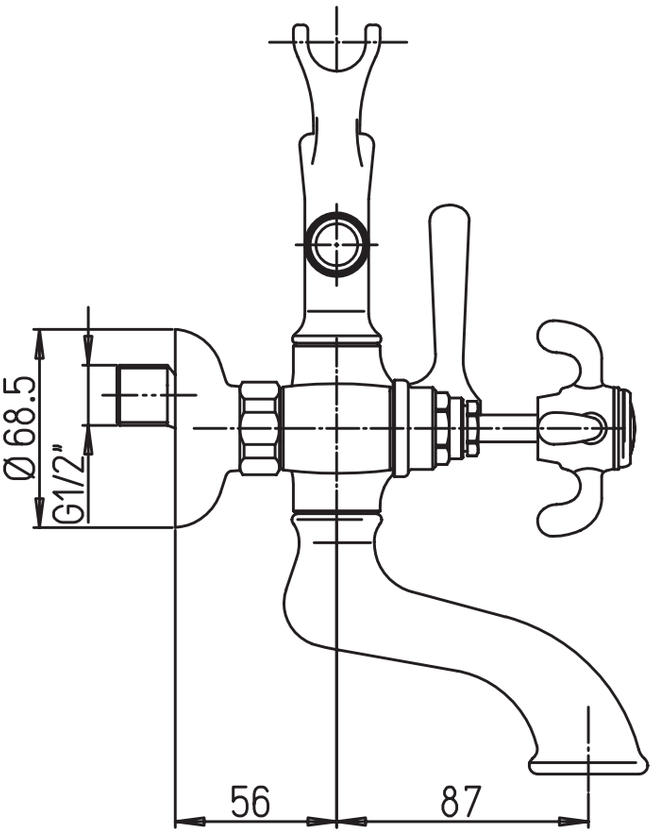
Ø 68.5
G1/2"
56
87

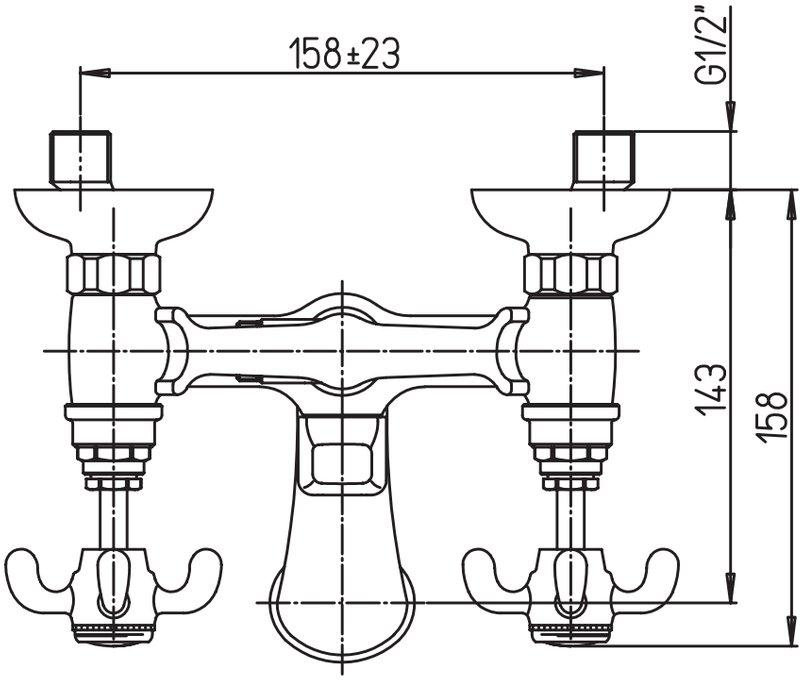
158±23
G1/2"
143
158