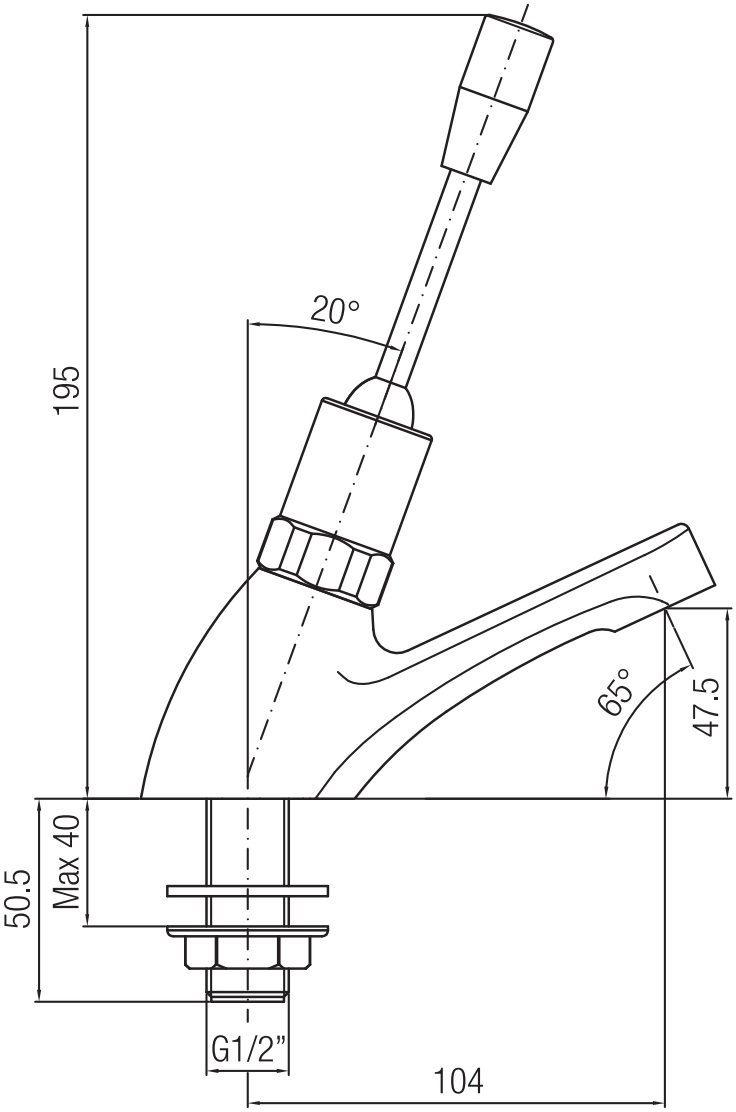
195
20°
65°
47.5
50.5
Max 40
G1/2”
104