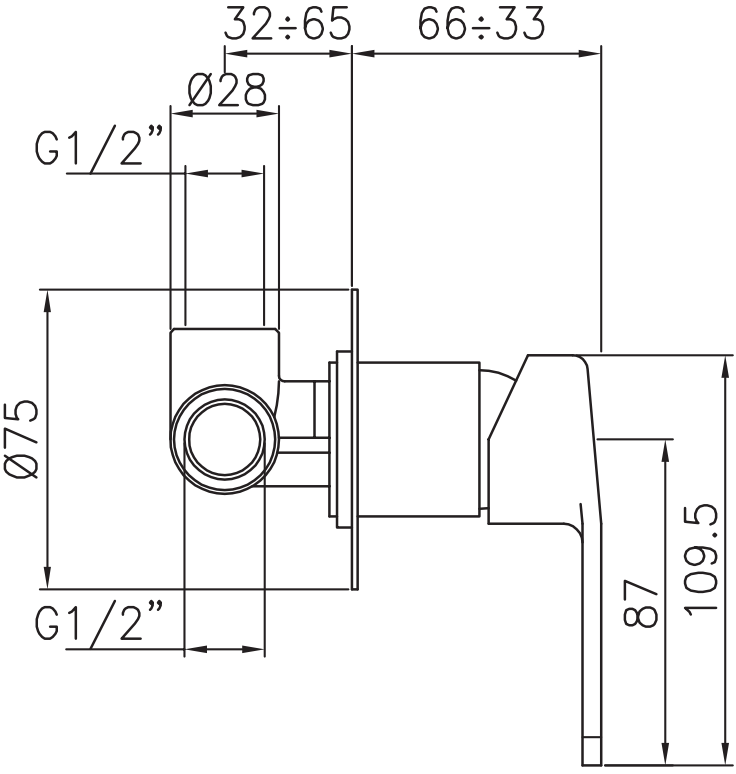
32÷65
66÷33
Ø28
G1/2”
Ø75
G1/2”
87
109.5