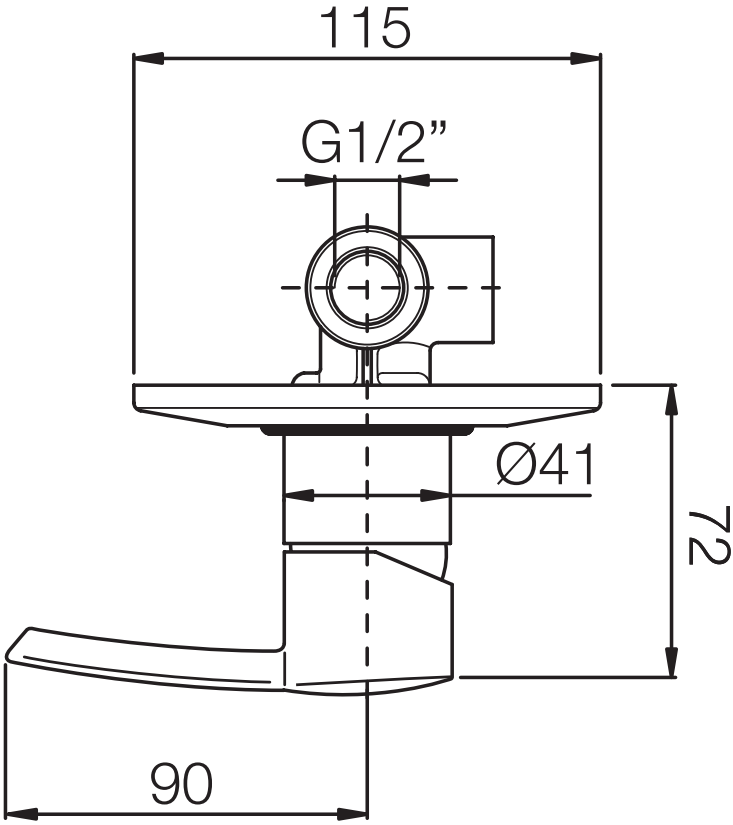
115
G1/2”
Ø41
72
90