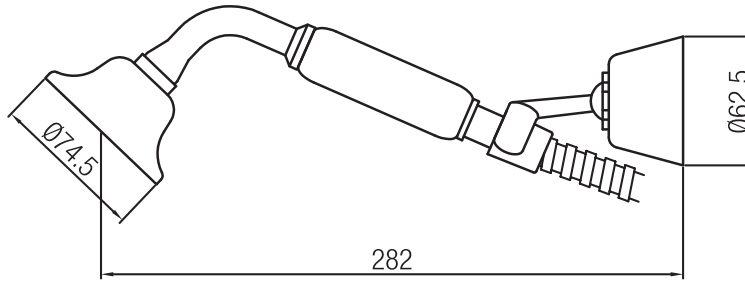
Ø74.5
Ø62.5
282

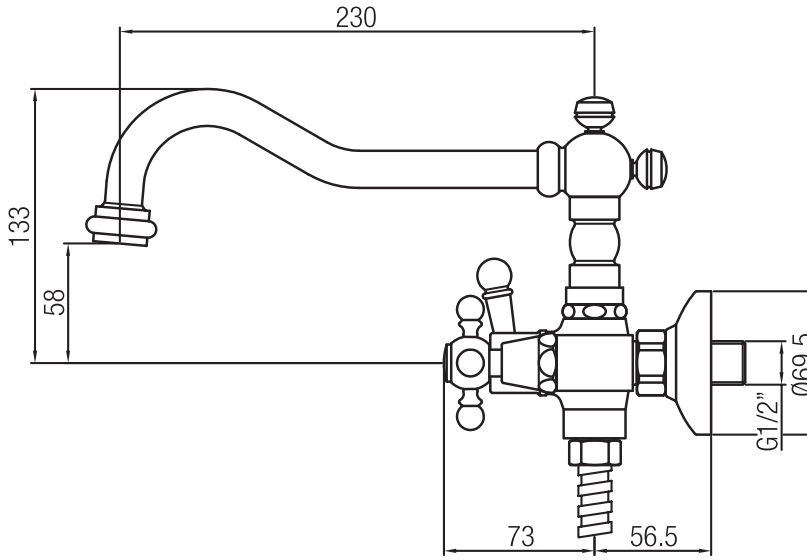
230
133
58
Ø69.5
G1/2”
73
56.5

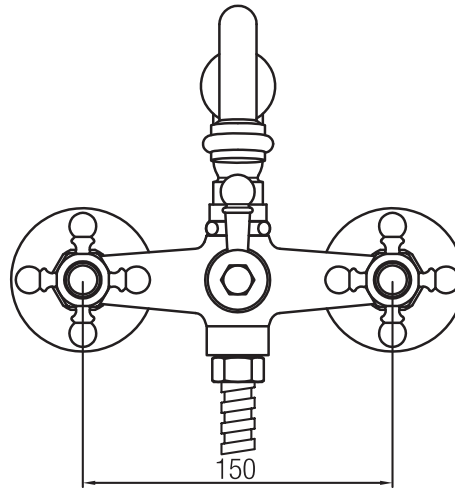
150