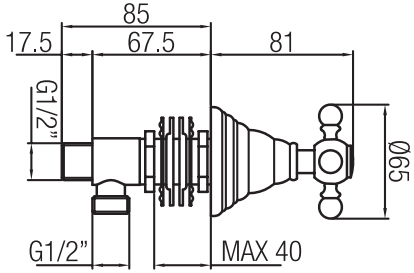
85
17.5
67.5
81
G1/2”
Ø65
G1/2”
MAX 40

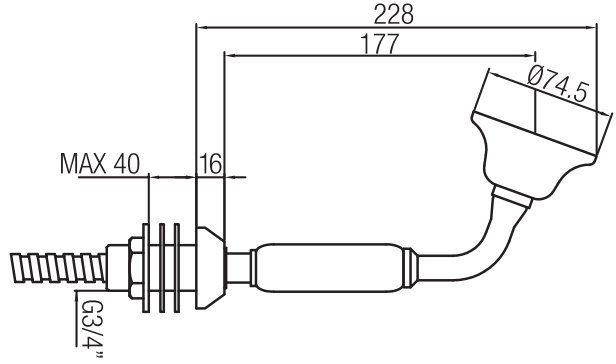
228
177
Ø74.5
MAX 40
16
G3/4”

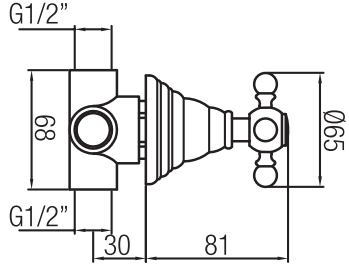
G1/2”
68
Ø65
G1/2”
30
81

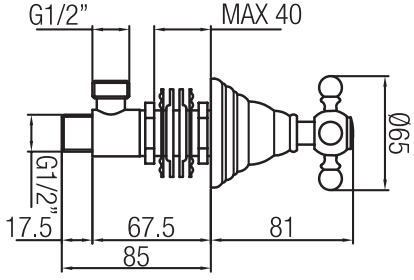
G1/2”
MAX 40
Ø65
G1/2”
17.5
67.5
81
85

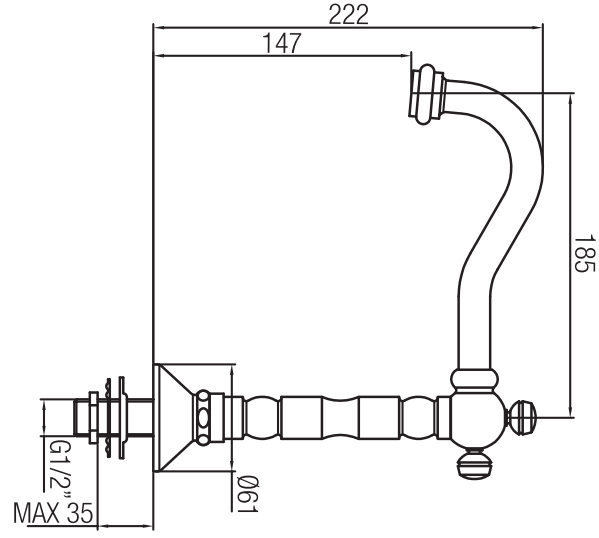
222
147
185
G1/2”
Ø61
MAX 35