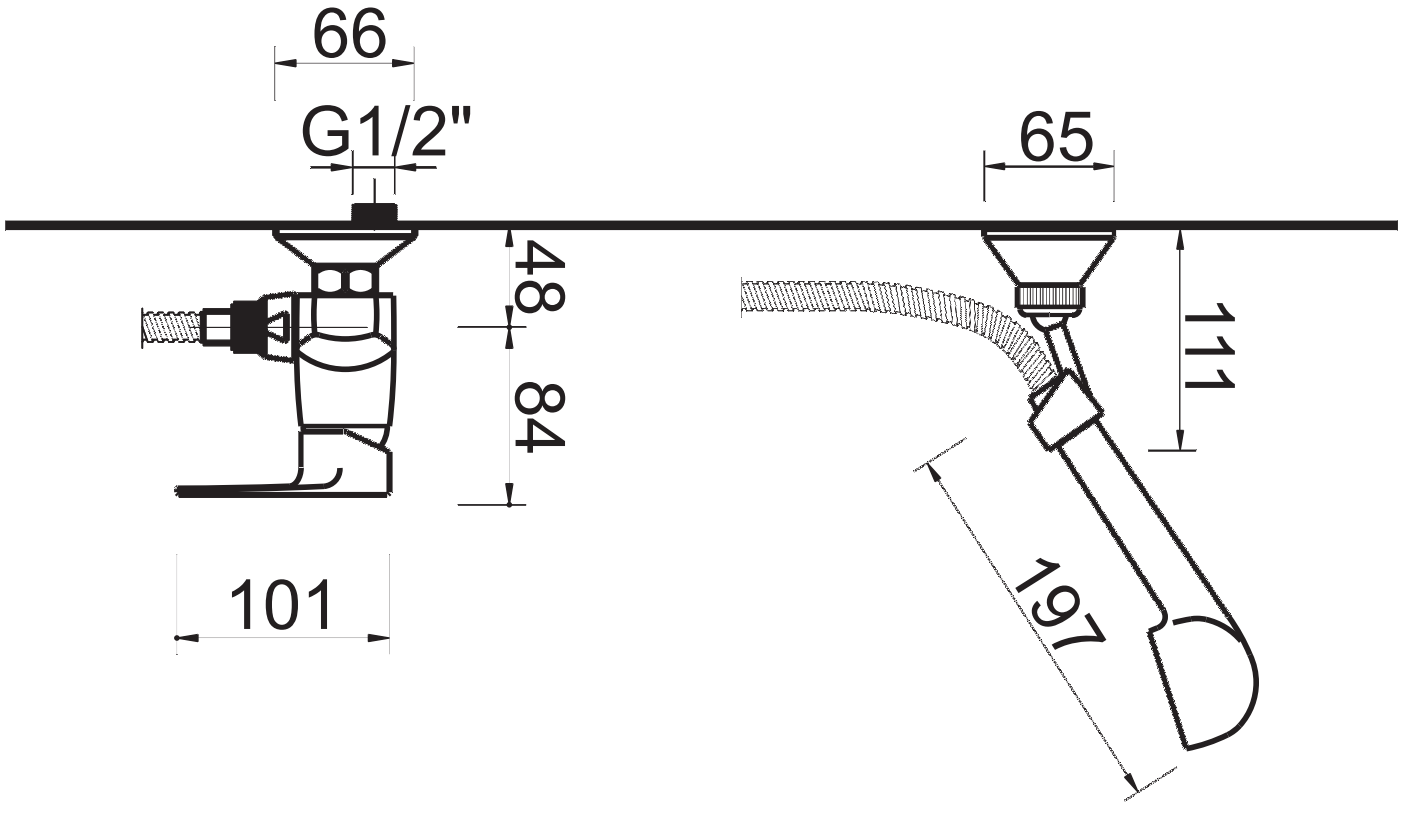
66
G1/2"
65
48
84
111
101
197