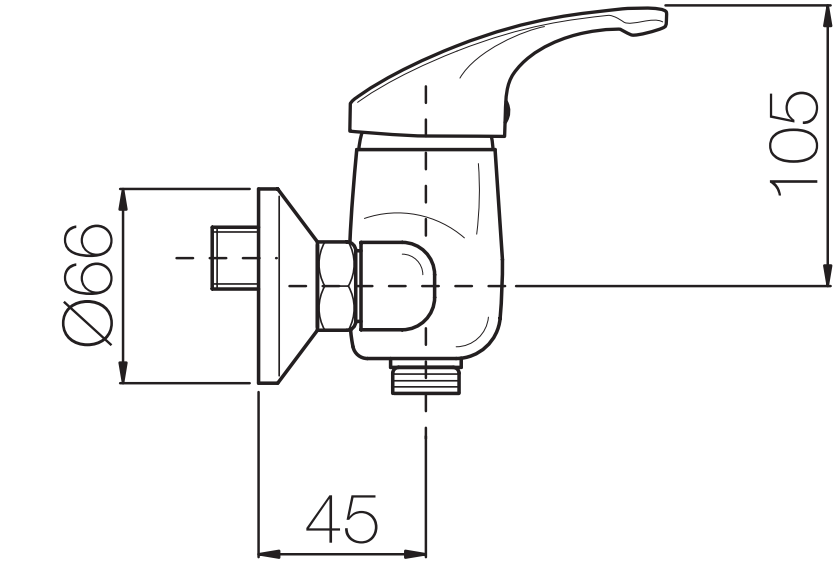
105
Ø66
45

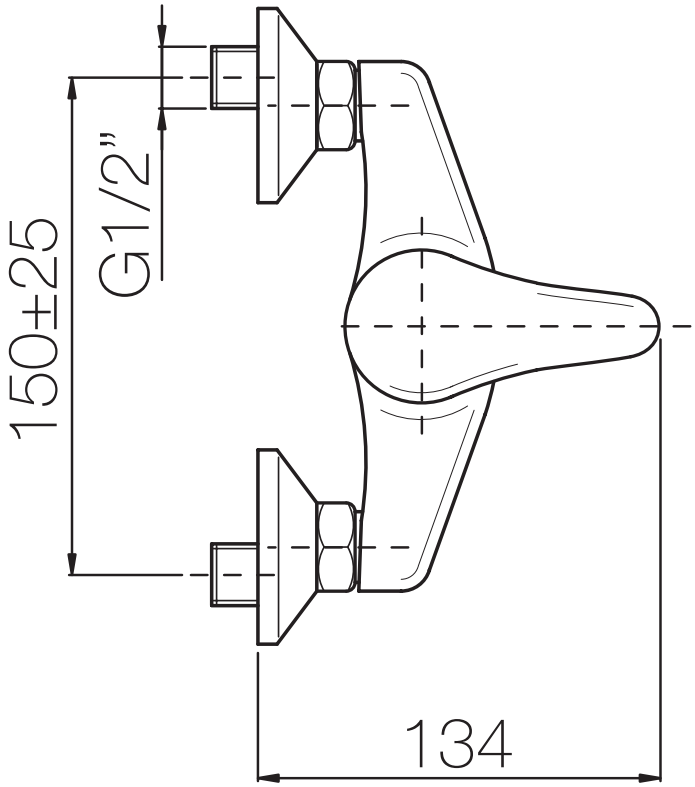
150±25
G1/2"
134