CROLLA
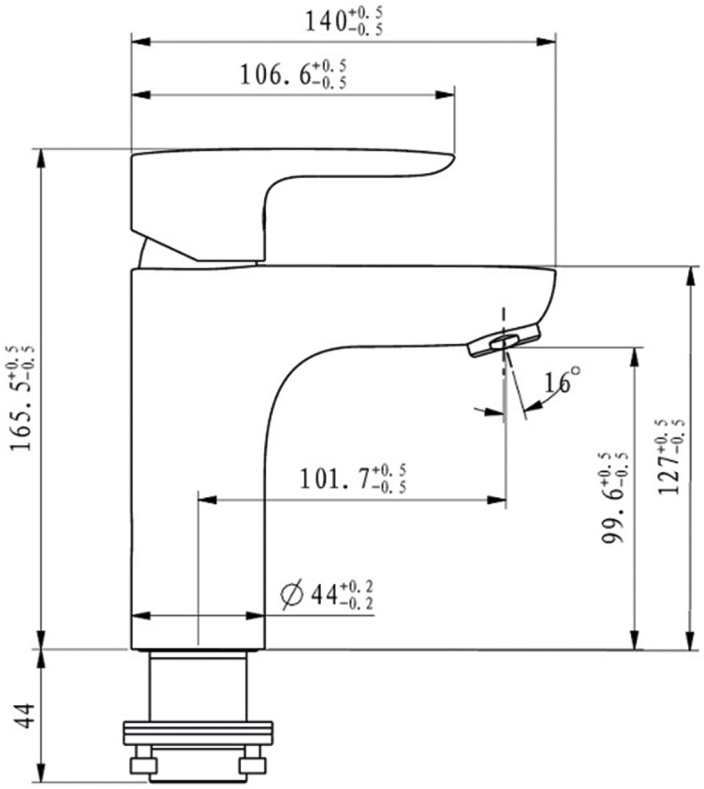
DISTINCTION AND TECHNOLOGY