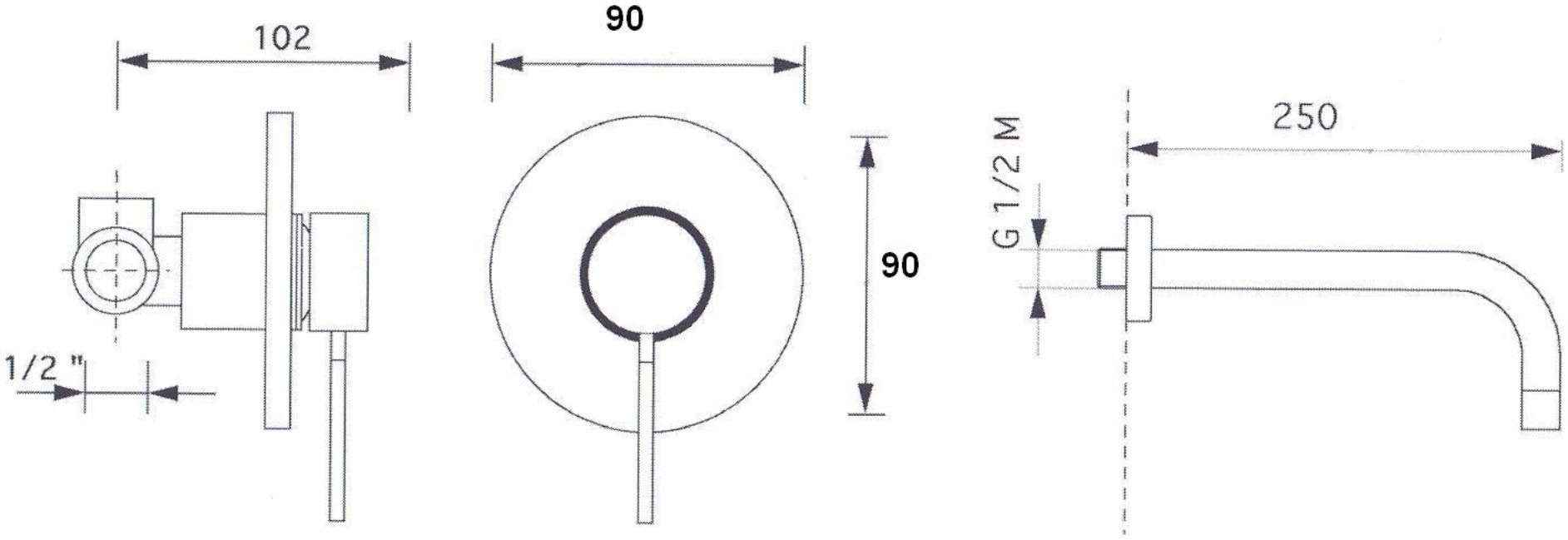
102
90
90
250
G 1/2 M
1/2 "