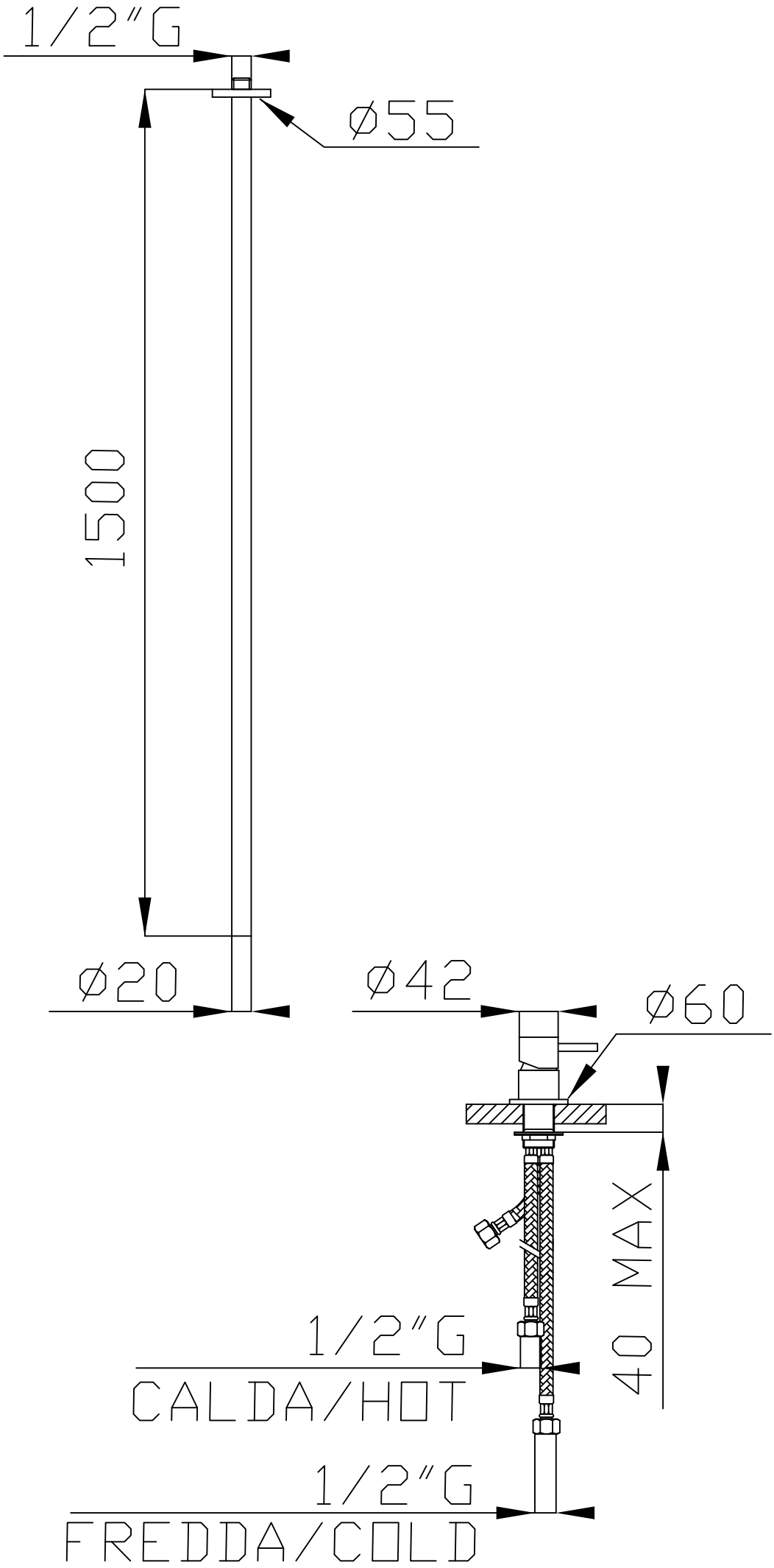
1/2"G
Ø55
1500
Ø20
Ø42
Ø60
40 MAX
1/2"G
CALDA/HOT
1/2"G
FREDDA/COLD