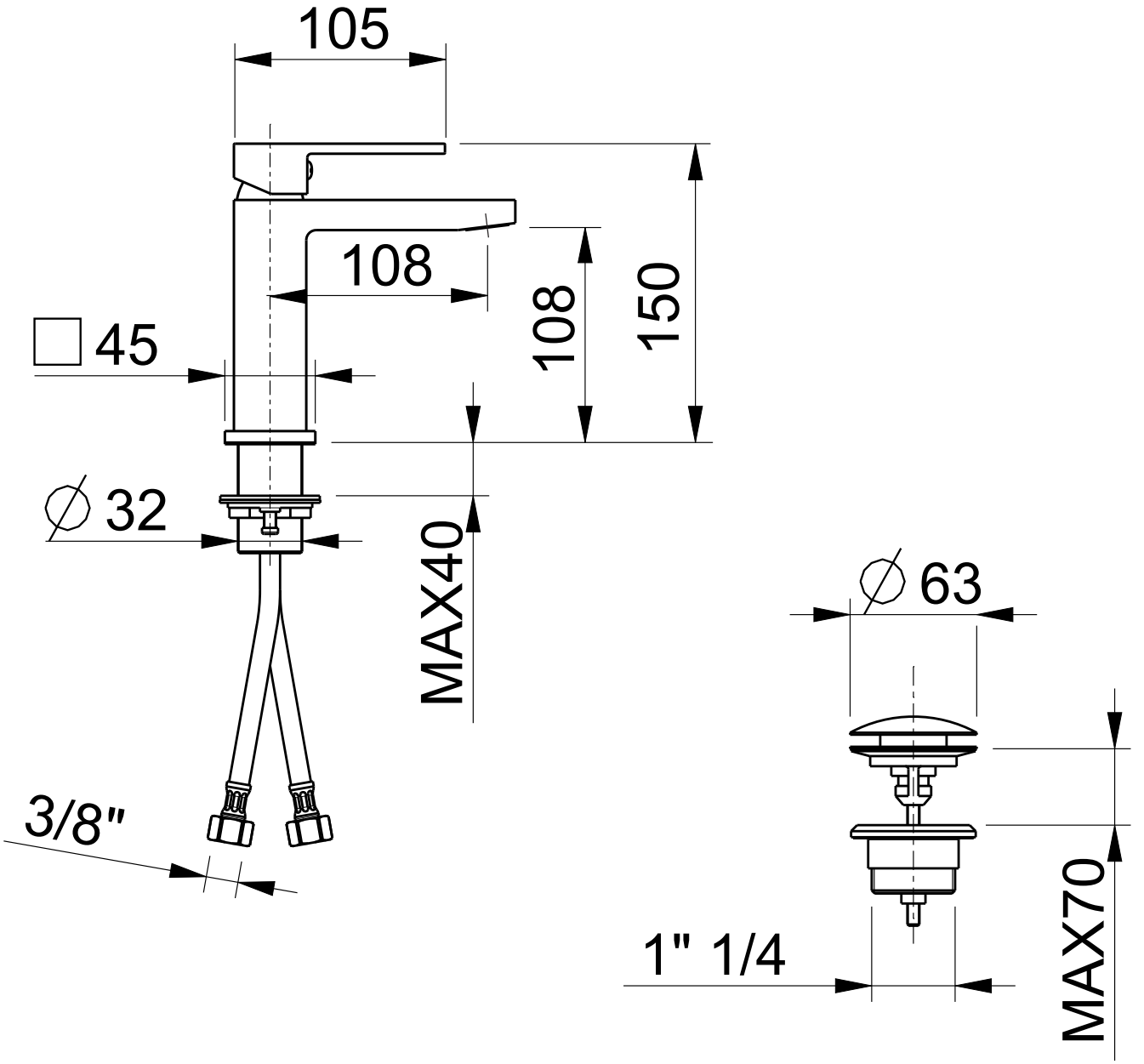
105
108
108
150
□ 45
∅ 32
MAX40
3/8"
∅ 63
MAX70
1" 1/4