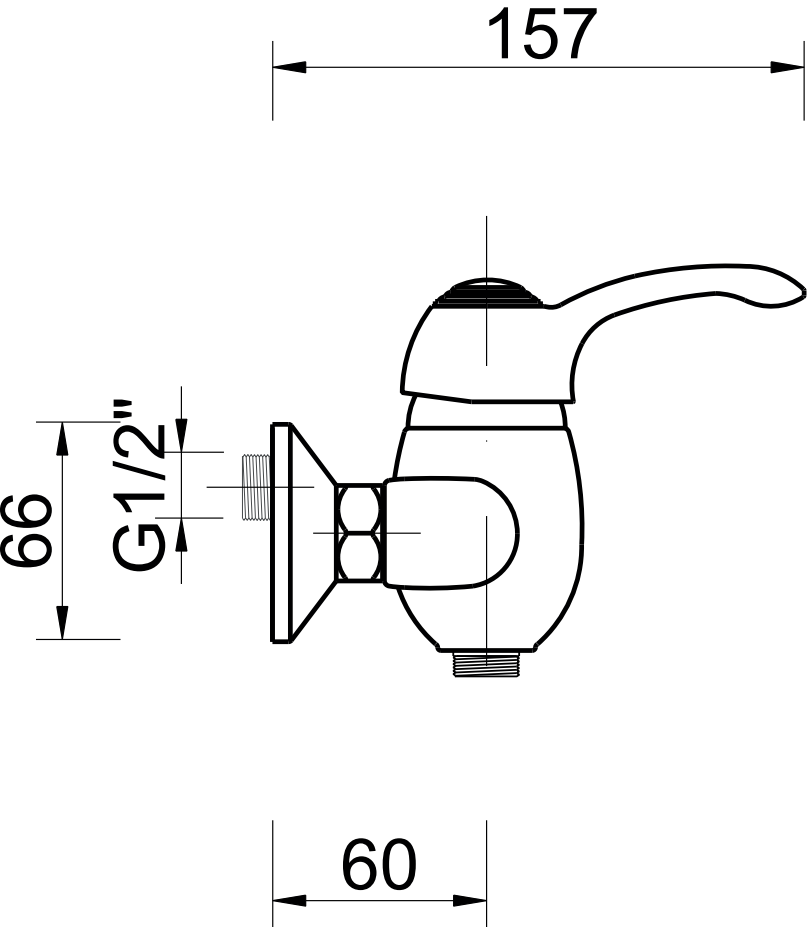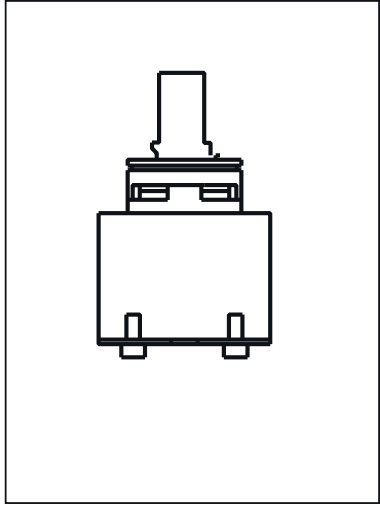
157
66
G1/2"
60