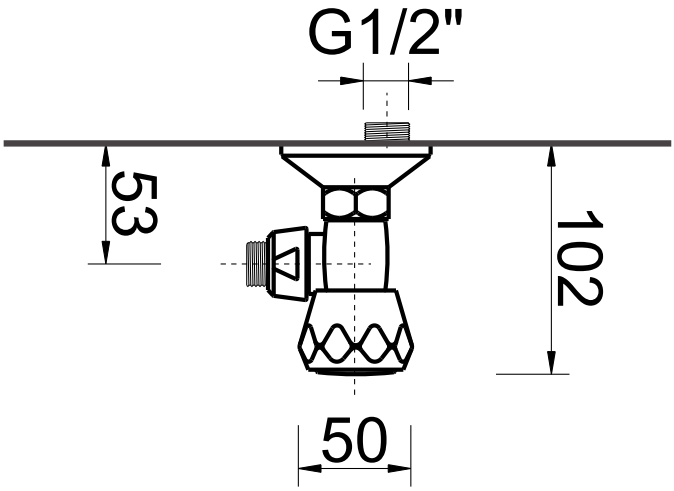
G1/2"
53
102
50

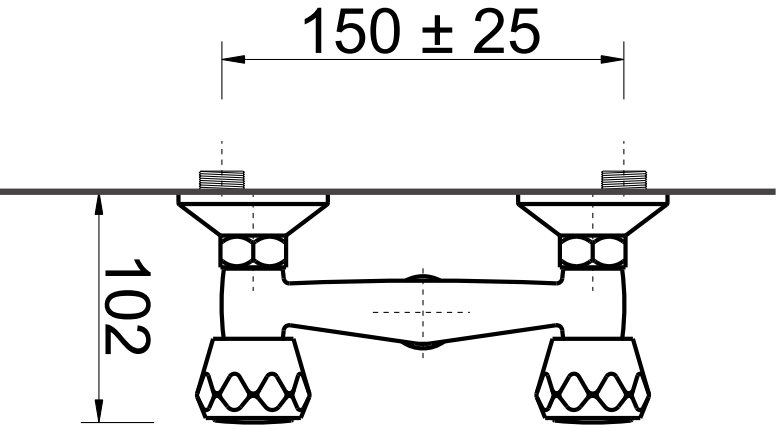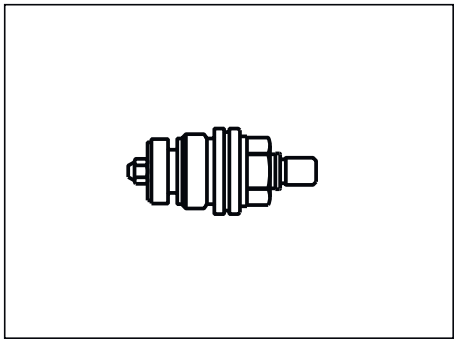
150 ± 25
102