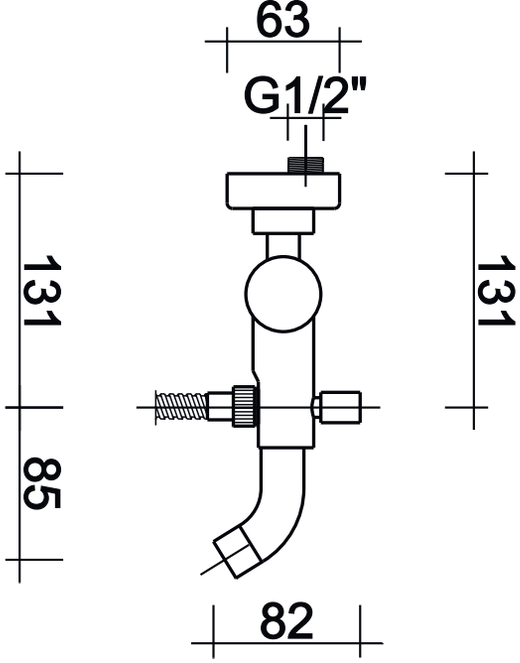
63
G1/2"
131
85
131
82

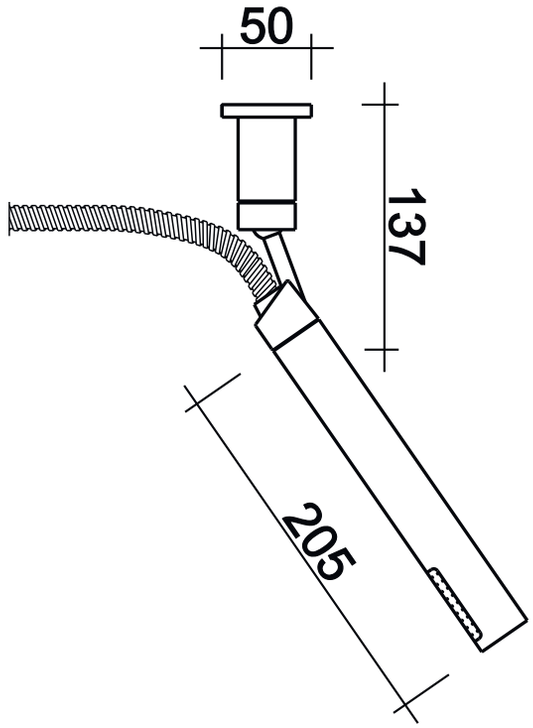
50
137
205

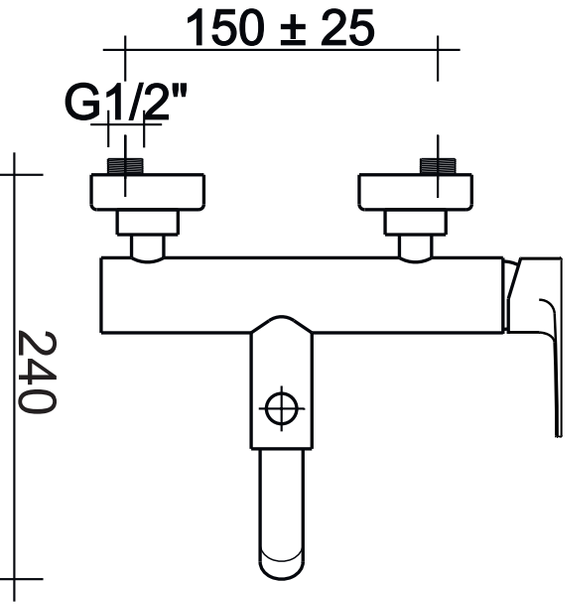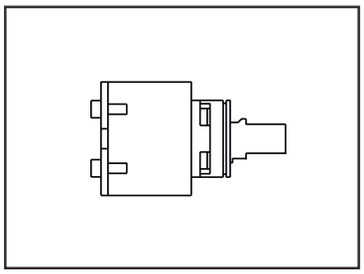
150 ± 25
G1/2"
240