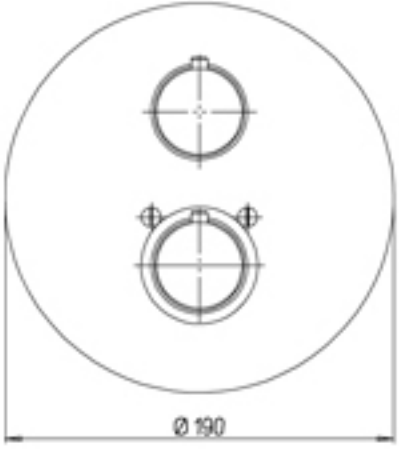
Ø 190

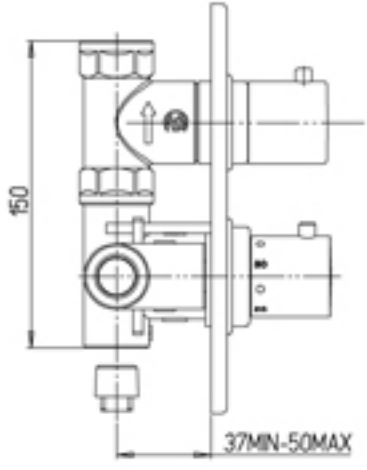
150
37MIN-50MAX

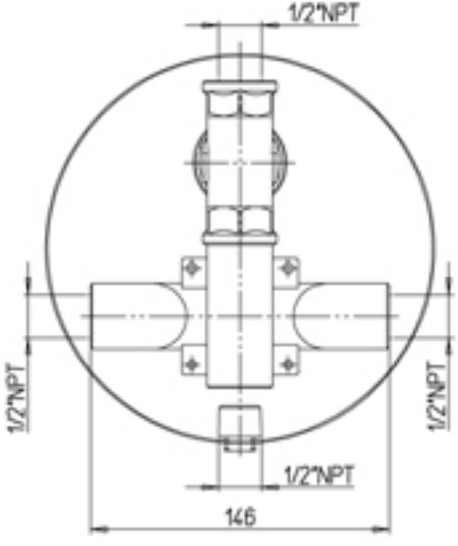
1/2"NPT
1/2"NPT
1/2"NPT
1/2"NPT
146