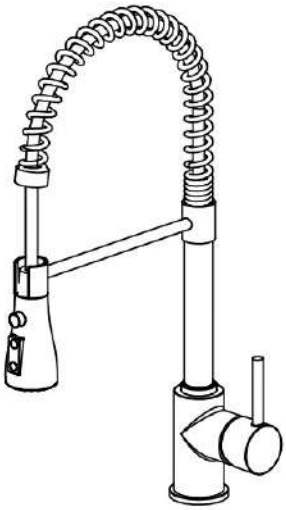

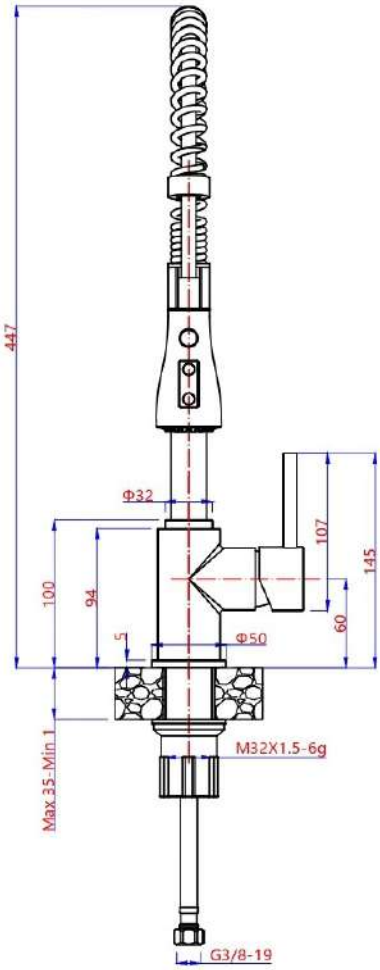
447
Φ32
100
94
5
Φ50
107
145
60
Max.35-Min.1
M32X1.5-6g
G3/8-19

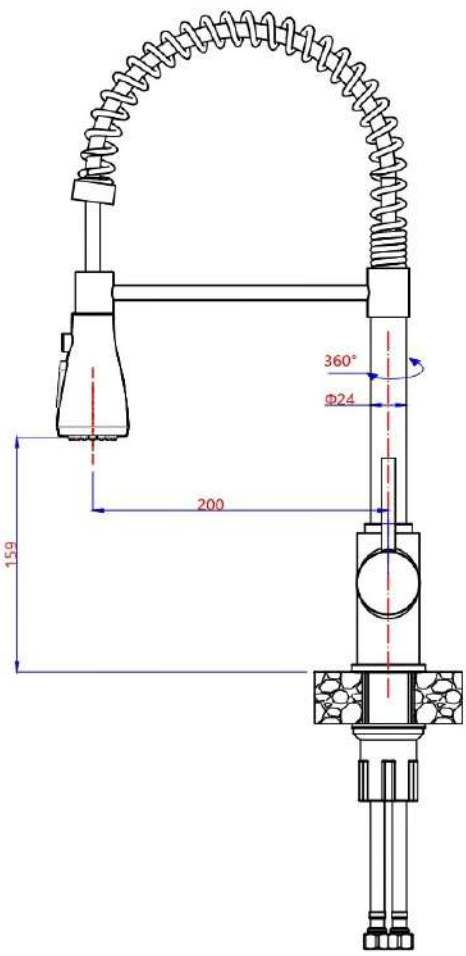
360°
Φ24
200
159